SEATCRAFT

Luminis 365

WITH POWER RECLINE

Loveseat Recliner

ASSEMBLY & GENERAL USE GUIDE

4567-E
RV.6/25/2026

Table of Contents

What's Inside the Box ---------- 2

Step 1: Attach the Backrest to the Seat ---------- 3

Step 2: Attach the Backrest to the Seat ---------- 4

Step 3: Connect the PowerCable ---------- 5

Step 4: Attach the Tray Table ---------- 6

Using the PowerControl Panel ---------- 7

Trouble shooting Guide ---------- 8-9

Seat Part List ---------- 10

Proposition 65 Information ---------- 11

Important Safety Instructions ---------- 12

Warranty Info & Contact Information ---------- 13

What's Inside the Box

BOX 1

1. BACKREST
2. SEAT
3. RED BAG (Includes: Power Adapter & Power Adapter Cable)

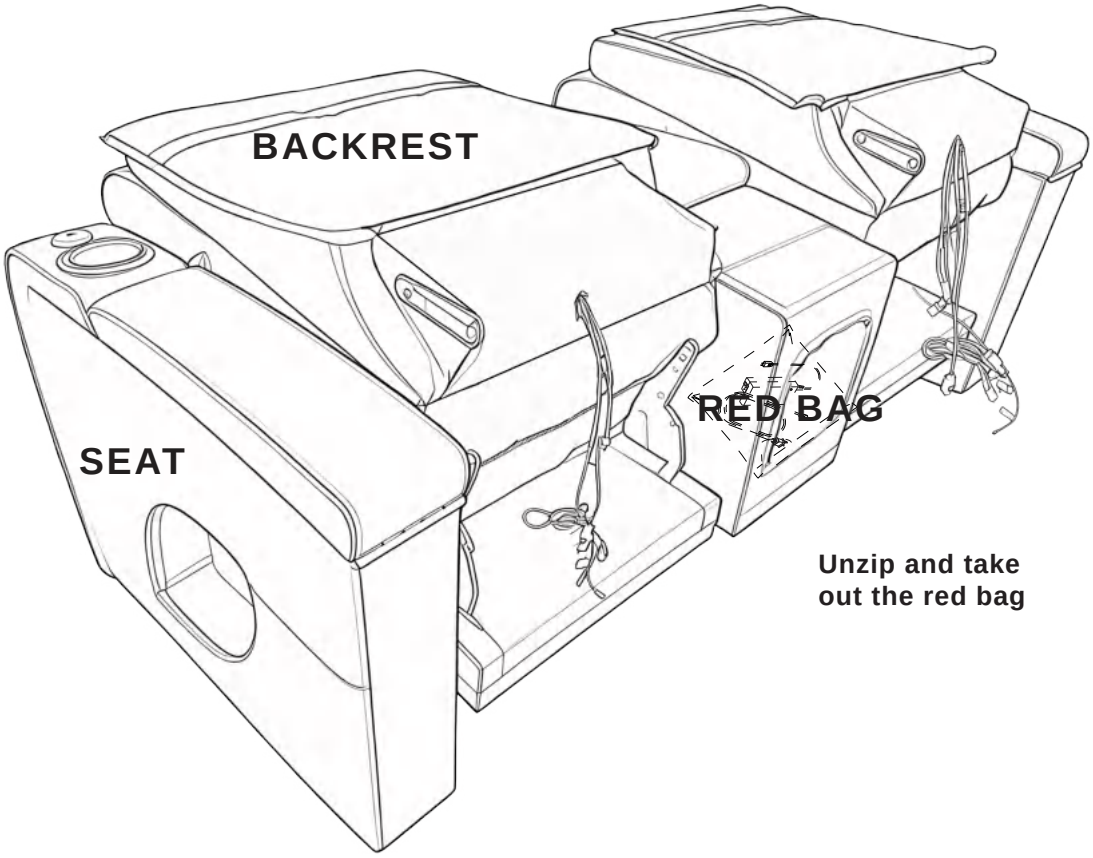



STEP 1

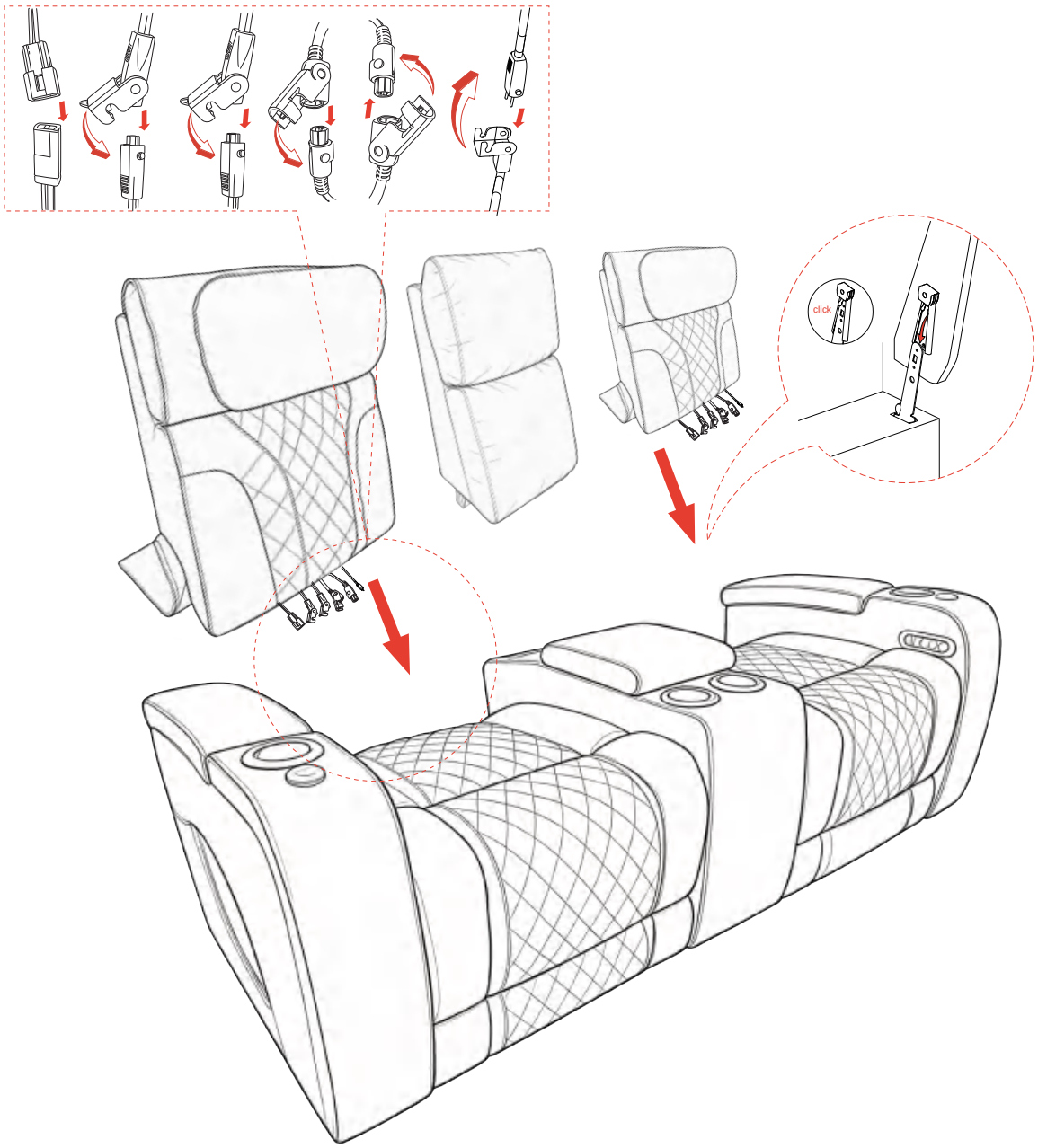

Attach the Backrest to the Seat Base

Slide the Backrest Female Brackets onto the Backrest Male Brackets.
Push until you hear a click on both sides. This will indicate that the backrest is secured.

STEP 2

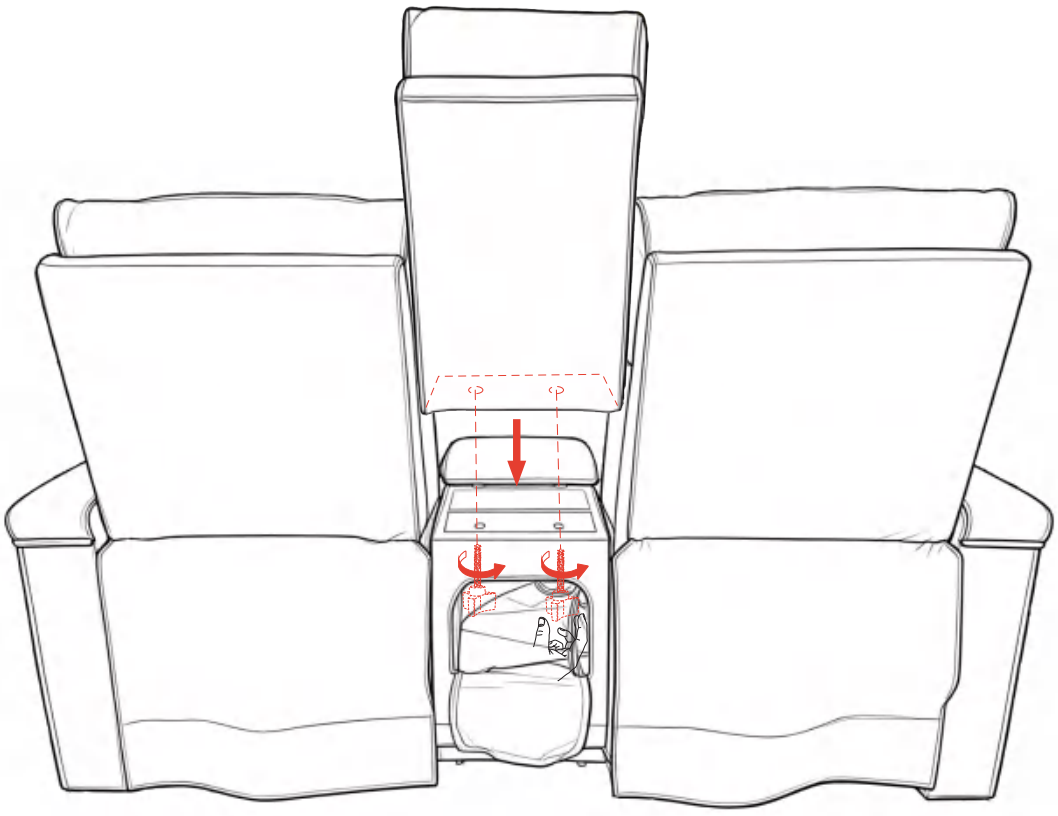

Attach the backrest to the base of the coffee table.

Place the backrest of the coffee table on the coffee table, unzip the zipper behind the coffee table, hold the bolt with your hand and insert it, align it with the hole upward, and tighten it clockwise.

STEP 3

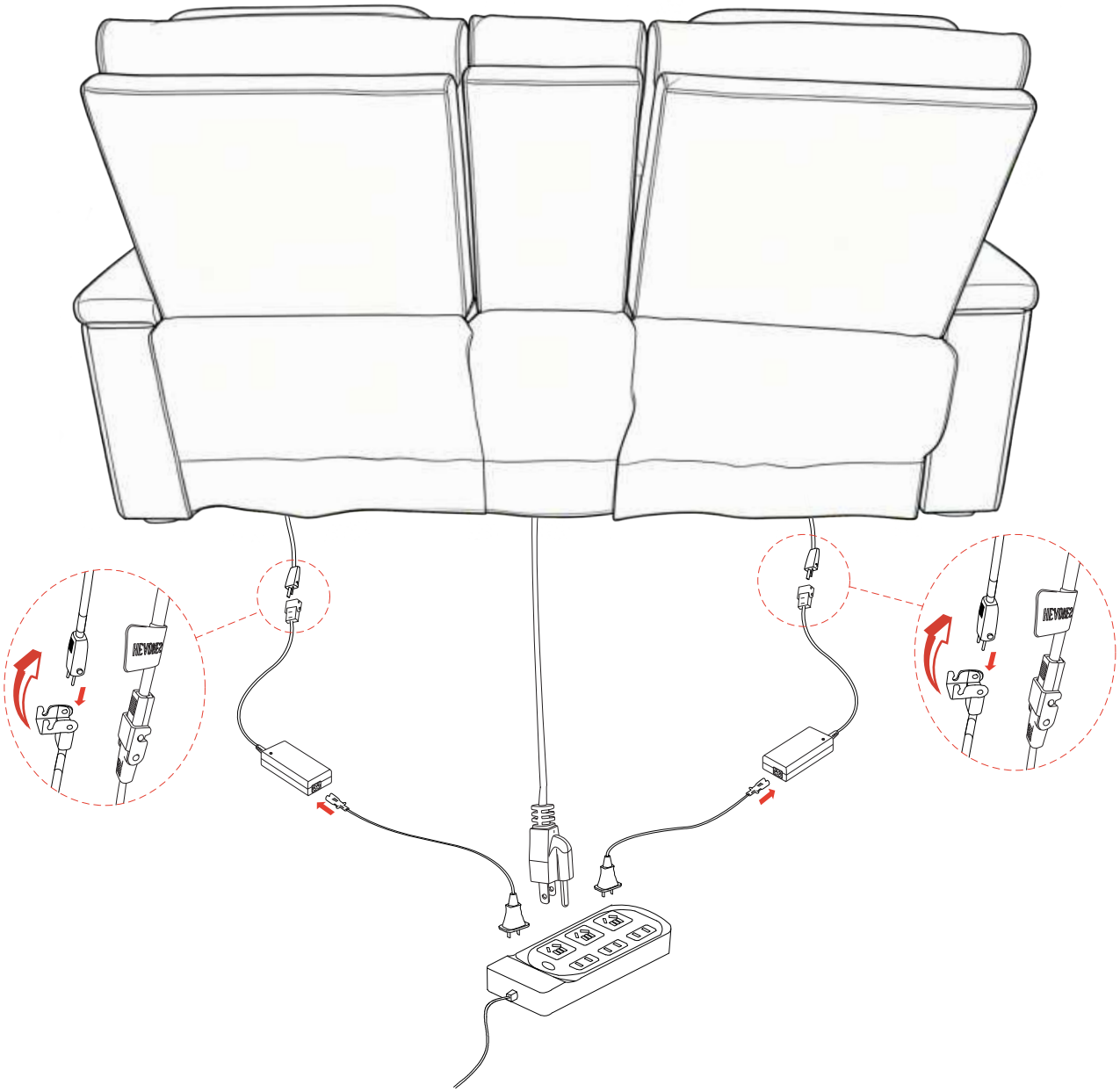

Connect the Power Cable

Plug the Power Adapter Cable into the Power Adapter. Connect the Power Adapter to the Power Recline Cable. Lock the two cables together.

STEP 4

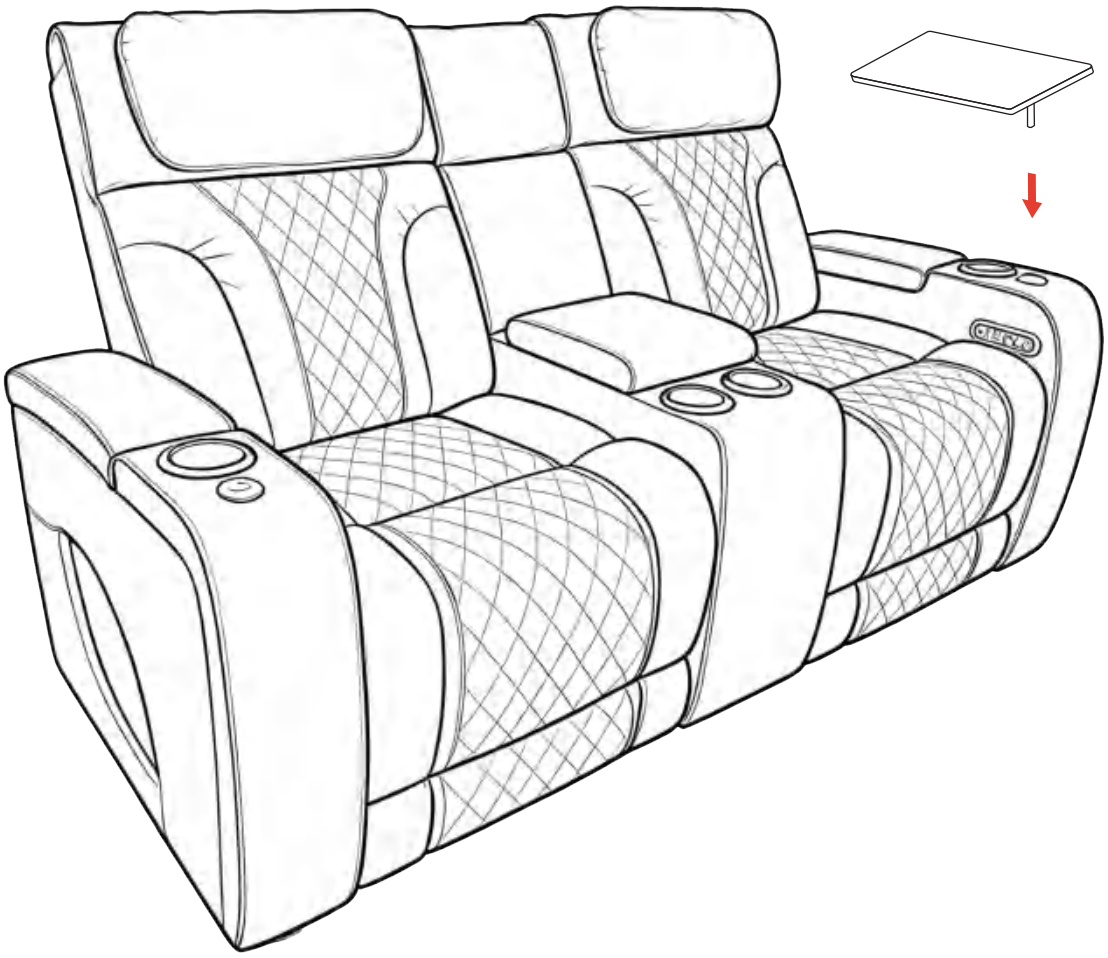

Attach the Tray Table

Open the in-arm storage to find your Tray Table. Place the Tray Table into the accessory mount.

Using the Power Control Panel

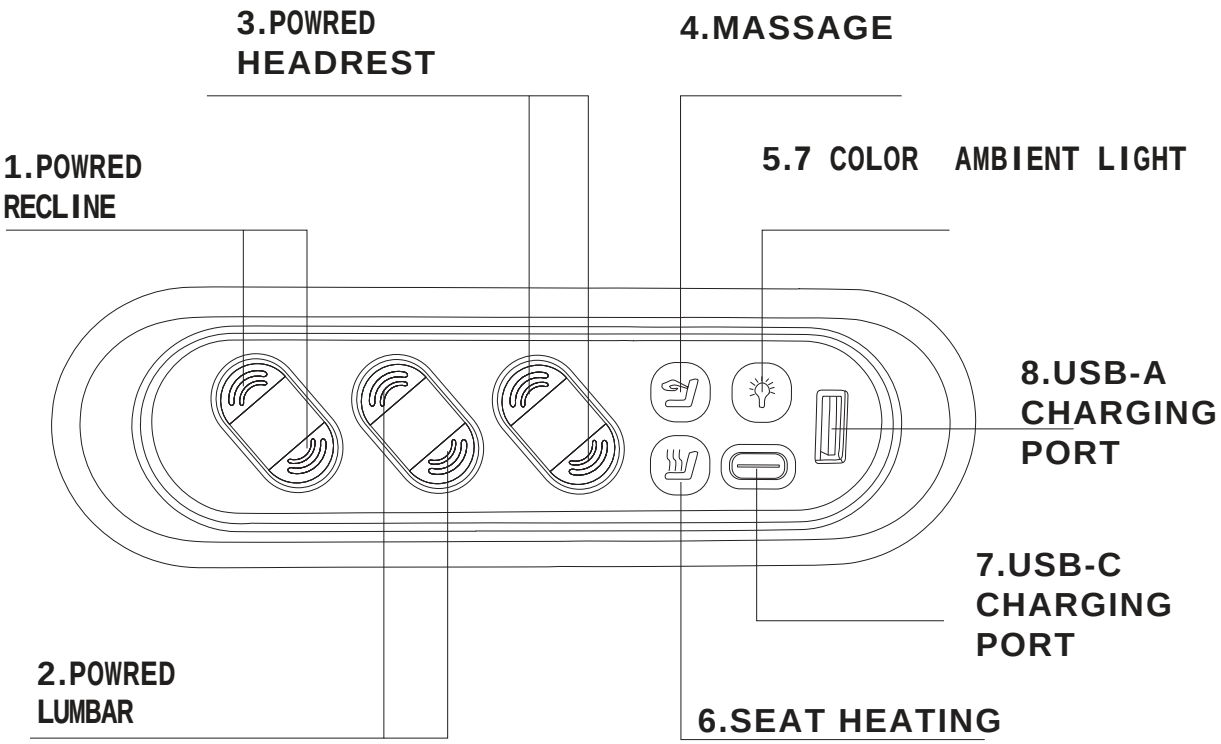

1. **POWRED RECLINE**
Adjust your seat to any desired position with the push of a button!

2. **POWRED LUMBAR**
The lumbar support function of the backrest can be turned on, turned off, and adjusted.

3. **POWRED HEADREST**
These power headrests can adjust to a number of different positions with ease, reducing neck and shoulder strain.

4. **MASSAGE**
You can turn on, turn off, and adjust the massage function of the backrest.

5. **7 COLOR AMBIENT LIGHT**
This button controls ambient base lighting and the lighted cupholders on each armrest. Press and hold for 4 seconds to cycle through the colors.

6. **SEAT HEATING**
You can open, close, and adjust the seat heating.

7. **USB-C CHARGING PORT**
Plug in any USB C powered device.

8. **USB-A CHARGING PORT**
Plug in any USB A powered device.

Adjust your seat to any desired position with the push of a button!

Trouble shooting Guide

Q. Why doesn't my chair have power?

A. The Power Adapter has become loose or disconnected.

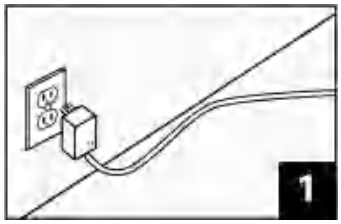

Unplug and re-plug in the Power Adapter to a wall outlet.

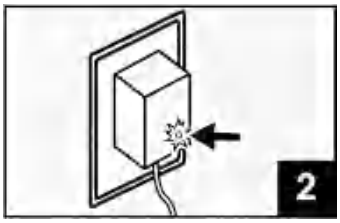

The green light on the Power Adapter should be illuminated.

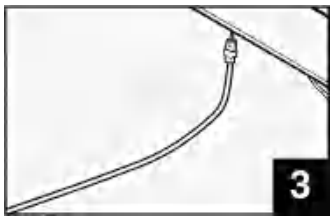

Unplug and re-plug in the Power Adapter Cable into the Seat Base Power Cable.

Q. Why arn't my chair's power features functioning?

A. Power Cable Connection has become loose or disconnected.

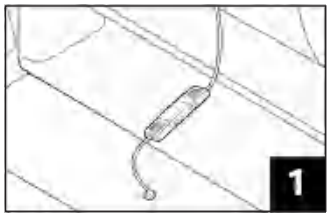

Unplug and re-plug the **Power Cable Connection** to each other.

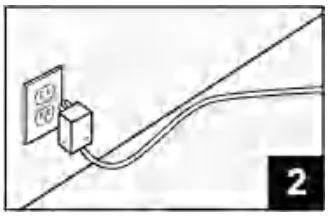

Unplug and re-plug in the Power Adapter to a wall outlet.

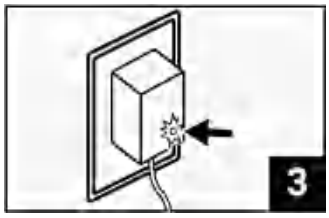

The green light on the Power Adapter should be illuminated.

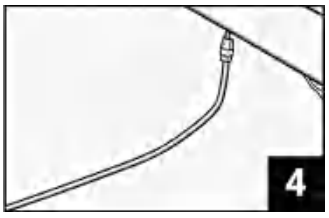

Unplug and re-plug in the Power Adapter Cable into the Seat Base Power Cable.

Trouble shooting Guide

Q. How come the lights on my cupholder or seat base are not lighting up?

A. The Power Adapter has become loose or disconnected.

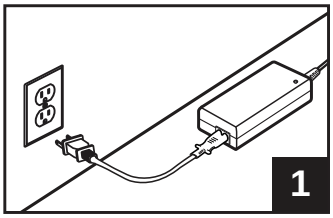

Unplug and re-plug in the Power Adapter to a wall outlet.

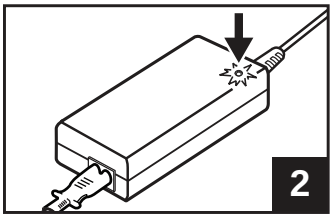

The green light on the Power Adapter should be illuminated.

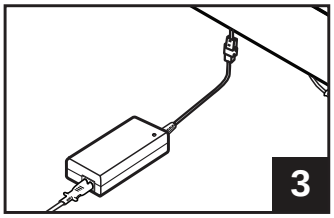

Unplug and re-plug in the Power Adapter to the Powered Recline Cable.

Q. How do I remove the backrest from the seat base?

A. The Backrest Female Bracket has a locking tab.

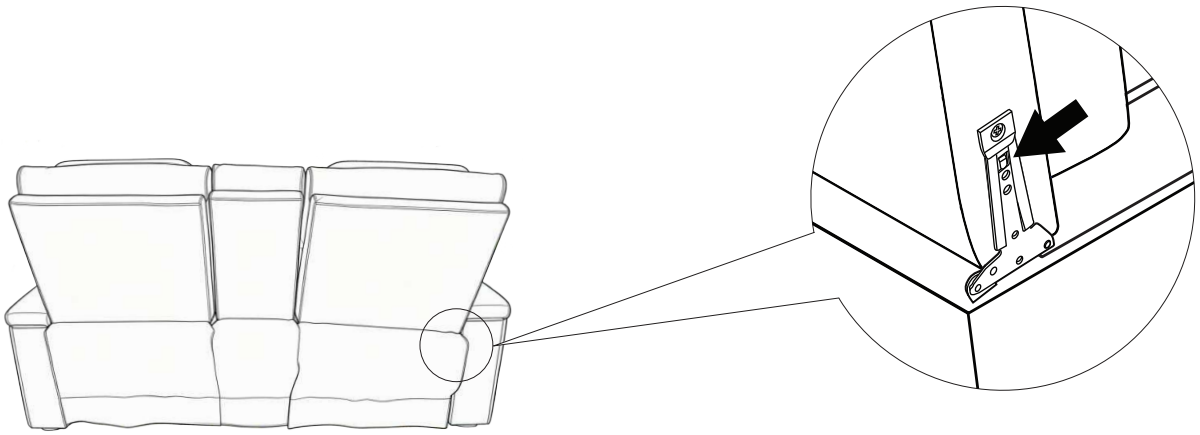

Pull up on the locking tab on the Backrest Female Bracket and firmly pull the backrest upward.

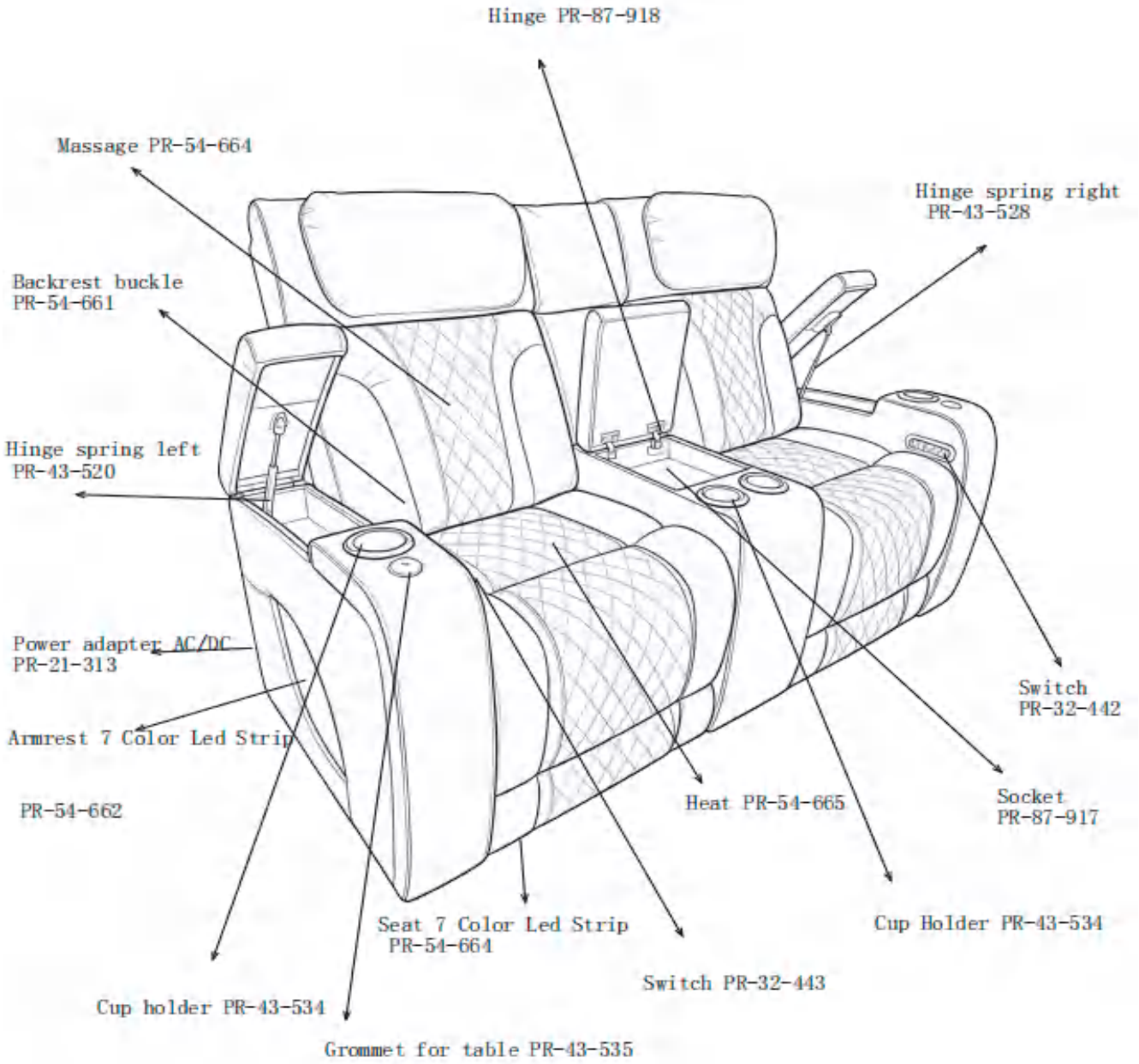

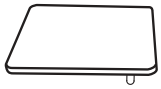

BLACKTRAYTABLE
PR-87-906

Mechanism for Recline	PR-87-921
Motor Recliner	PR-87-920

Proposition 65 Information

Q. What is Proposition 65?

A. You might have seen Proposition 65 warning labels at hotels, banks, restaurants, and even at theme parks. Proposition 65 is a California law that requires warnin labels on products that may contain one of more than 800-plus chemicals or ingredients that the California Office of Environmental Health Hazard Assessment (OEHHA) has deemed to cause cancer or other reproductive toxicity. Chemicals and elements on this list include saw dust, brass, and other everyday substances which can be found in very common household items, such as lamps, tableware, jewelry, crystal glasses, electric cords, beauty products, automobiles, and furn

Q. Why did I find a Proposition 65 warning on my furniture product?

A. This warning label is very common and can be found on almost every piece of furniture sold in the state of California. By law the state of California requir we include a Proposition 65 warning on all of our products.

Important Safety Instructions

⚠ DANGER — TO REDUCE THE RISK OF ELECTRIC SHOCK OR SERIOUS INJURY:

- Disconnect the electrical plug from the wall outlet before cleaning, moving, servicing or when not in use for an extended period of time.
- Do not use this product if it is wet, in water, around wate any liquid.

⚠ WARNING — TO REDUCE THE RISK OF BURNS, FIRE, ELECTRIC SHOCK OR SERIOUS INJURY.

- Do not operate the unit until the back is installed and locked.
- Closely supervise children and disabled persons using this product.
- This product has many moving parts, serious injury can occur if not used properly. Keep children and pets away from the mechanism. Keep hands, fingers and body parts away from the mechanism.
- Sit down in the unit slowly. To avoid tip over, do not throw your weight against the back of the unit. Move the unit into or out of the reclining position slowly, making sure that no children or pets are in close proximity.
- Only the occupant should operate the unit. Never attempt to open the leg rest by pulling on it.
- Do not stand, sit or place extra weight on the arms, back or open leg rest.
- To safely exit the unit and prevent a tripping hazard bring the back upright and close the leg rest.
- Provide a clear path for operation of the chair, back and leg rest. Place tables and area rugs at a distance to allow the leg rest to fully extend without rubbing or interference.
- Keep hands, arms and body parts away from the open area between a reclined back and an upright back on a motion sofa. This area must remain clear at all times to provide unobstructed movement and prevent injury that could occur when a reclined back is returning toward the upright position.
- Use care when moving the product. Before lifting the product, secure the mechanism to prevent unexpected opening or movement. Never move the product by the mechanism, leg rest, handle, reclining back or swivel base. Disconnect modular units. Securely grip non-moving parts only.
- Do not use this product if it is damaged. Do not use attachments or substitute parts.
- Check the condition of the power transformer, electrical cord, plug, and connectors regularly. Keep the power transformer and electrical cords away from heat sources. Never operate the unit with a damaged power transformer, electrical cord, plug or connector.
- Do not use unit if power control is damaged or wet. Do not use unit if the hand wand has been dropped in water or any liquid.
- This product is not intended for use as a healthcare device
- Users of medical devices should contact their healthcare provider before using this product. Do not use this product if you have poor circulation, are immobile or cannot sense heat, except as directed by your healthcare provider.
- This product is intended for indoor residential use only.
- Always keep open flame and lit cigarettes away from upholstered furniture. Upholstered furniture may burn rapidly with toxic gas and thick smoke.

Warranty Information

Seatcraft is proud of its high standards of quality and workmanship that go into our proc
The customer is protected by the following Limited Warranty, which applies to seats und
normal indoor residential use. This warranty does not apply to seats used for commercia
institutional, or other non-residential uses.

ONE YEAR LIMITED WARRANTY: Seatcraft provides (1) one year comprehensive coverage
for all components such as materials, foam and frame parts, and mechanisms including
motorized parts from defective materials or workmanship.

MATERIAL: Normal fabric fading, shrinking, or stretching is not covered by this warran
Similarly, the natural markings, stretching, and shrinking of leather is a proud mark
authenticity and therefore not covered by this warranty. Evidence of improper cleaning, a
or abnormal use of the materials will void this warranty.

FOAM AND FRAME PARTS: Seatcraft warrants these components for (1) one year from the
time of delivery, against manufacturing defects. Foam compression is natural, and theref
not covered by this warranty.

MECHANISMS: Seatcraft warrants these components for (1) one year from the time of deliver
against manufacturing defects. After the warranty period, the customer is responsible f
inspection, labor and transportation costs.

No warranties, express or implied, apply after the expiration of this Limited Warranty.
warranty period covers repair, substitution, and replacement. No returns or refunds ar
covered. A proof of purchase is required to service a claim; simply present the bill of s
dealer from whom the item was purchased, to request warranty service. Seatcraft is not li
for incidental or consequential damages occurring outside the terms of this warranty, ev
advance knowledge of such damages was possible.

Contact Information

We're here to help. For any missing or damaged parts or installation assistance please c
at 1-855-244-0170.

HOURS

Mon-Fri	6AM - 7PM PST
Sat	9AM - 5PM PST
Sun	10AM - 5PM PST