SEATCRAFT

VIRTUOSO

Heat, Massage, Power Headrest, Power Lumbar, &
Power Recline Home Theater Seating

ASSEMBLY & GENERAL USE GUIDE

3610-E
Rev. 11/13/2023

Table of Contents

What's Inside the Box	2
Step 1: Connect the Remote, Massage, & Power	3
Step 2: Attach the Backrest to the Seat Base	4
Step 3: Connect the Power Adapter Cable to Seat Base	5
Step 4: Attach the Tray Table	6
Using the Power / Massage Remote Control	7
Troubleshooting Guide	8-10
Seat Parts List	11
Proposition 65 Information	12
Important Safety Instructions	13
Warranty Info & Contact Information	14

What's Inside the Box

1. **BACKREST**
2. **SEAT BASE**
3. **RED BAG** (Includes: Power Adapter & Power Adapter Cable)

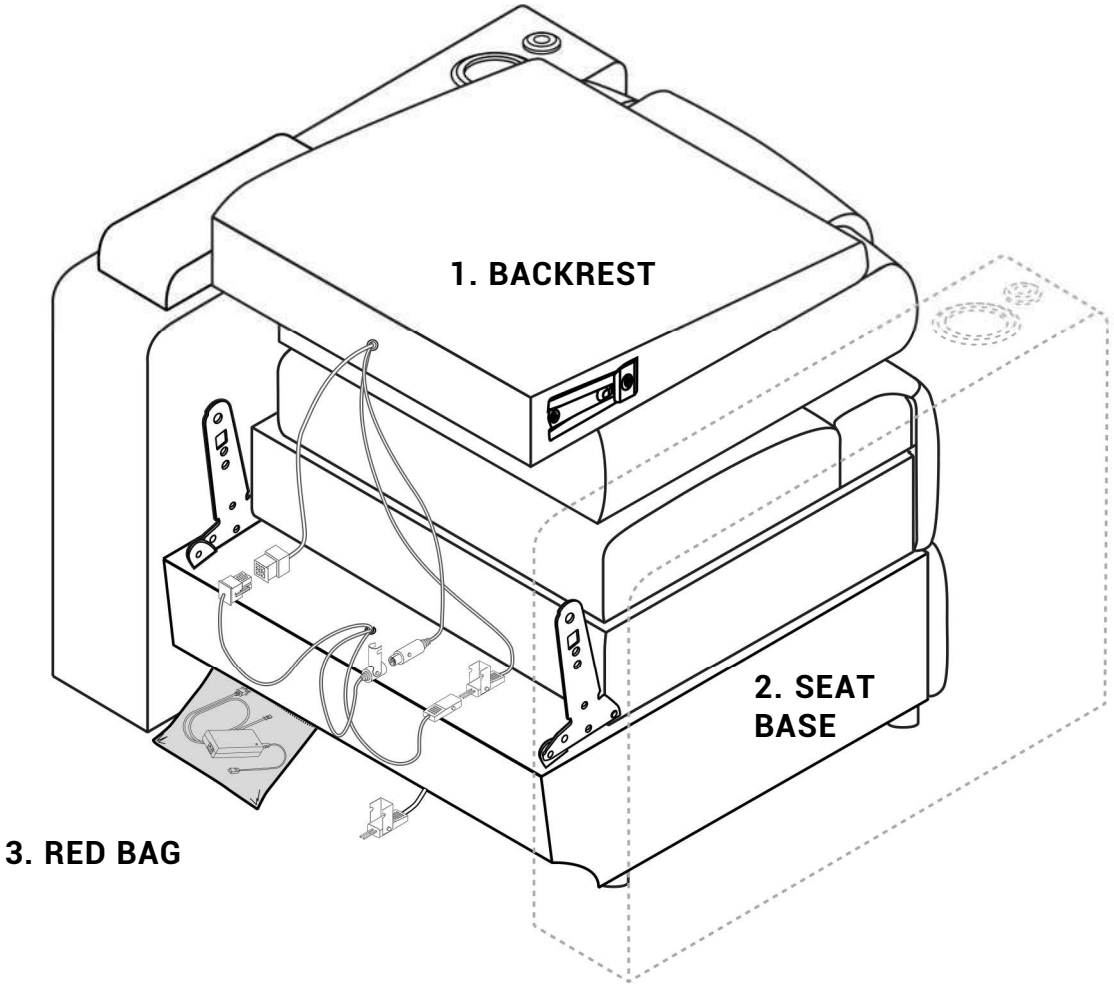

STEP 1

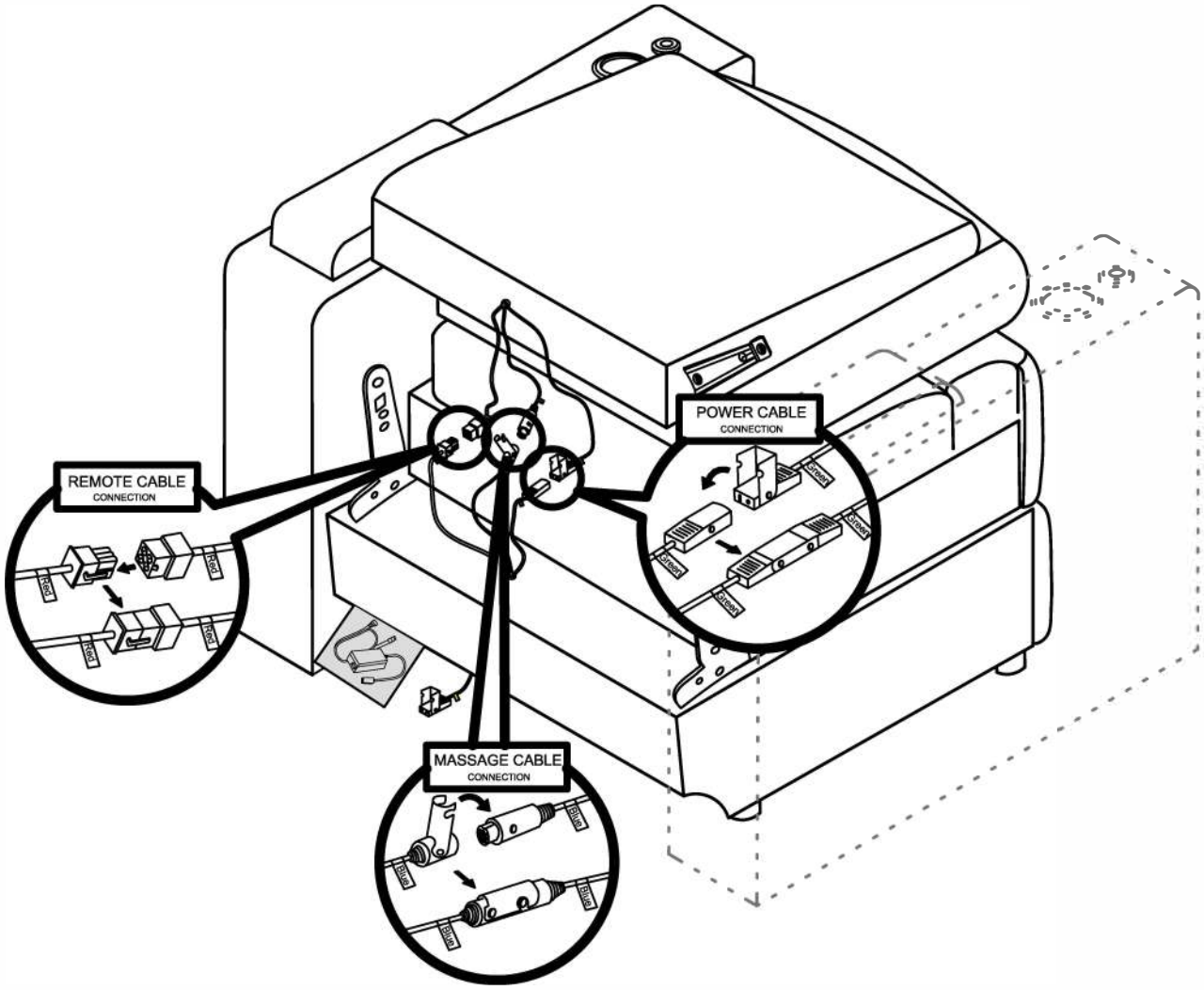

Connect the Remote, Massage, & Power Cable Connections

Connect each Massage Remote Female Cable to the Massage Remote Male Cable.
Connect each Massage Female Cable to the Massage Male Cable. Lock both cables together.
Connect each Power Female Cable to the Power Male Cable. Lock both cables together.

STEP 2

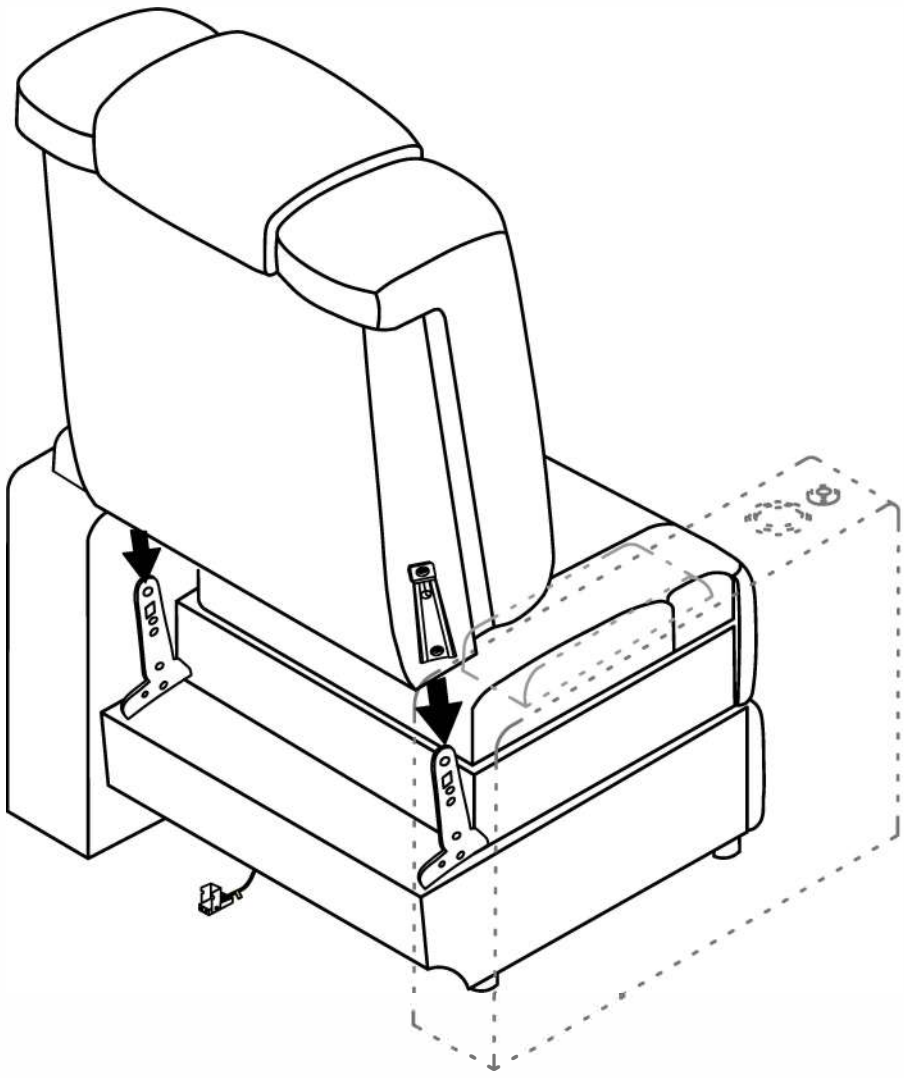

Attach the Backrests to the Seat Base

Slide the Backrest Female Backest onto the Backrest Male Brackets.
Push until you hear a click on both sides. This will indicate that each backrest is secured.

STEP 3

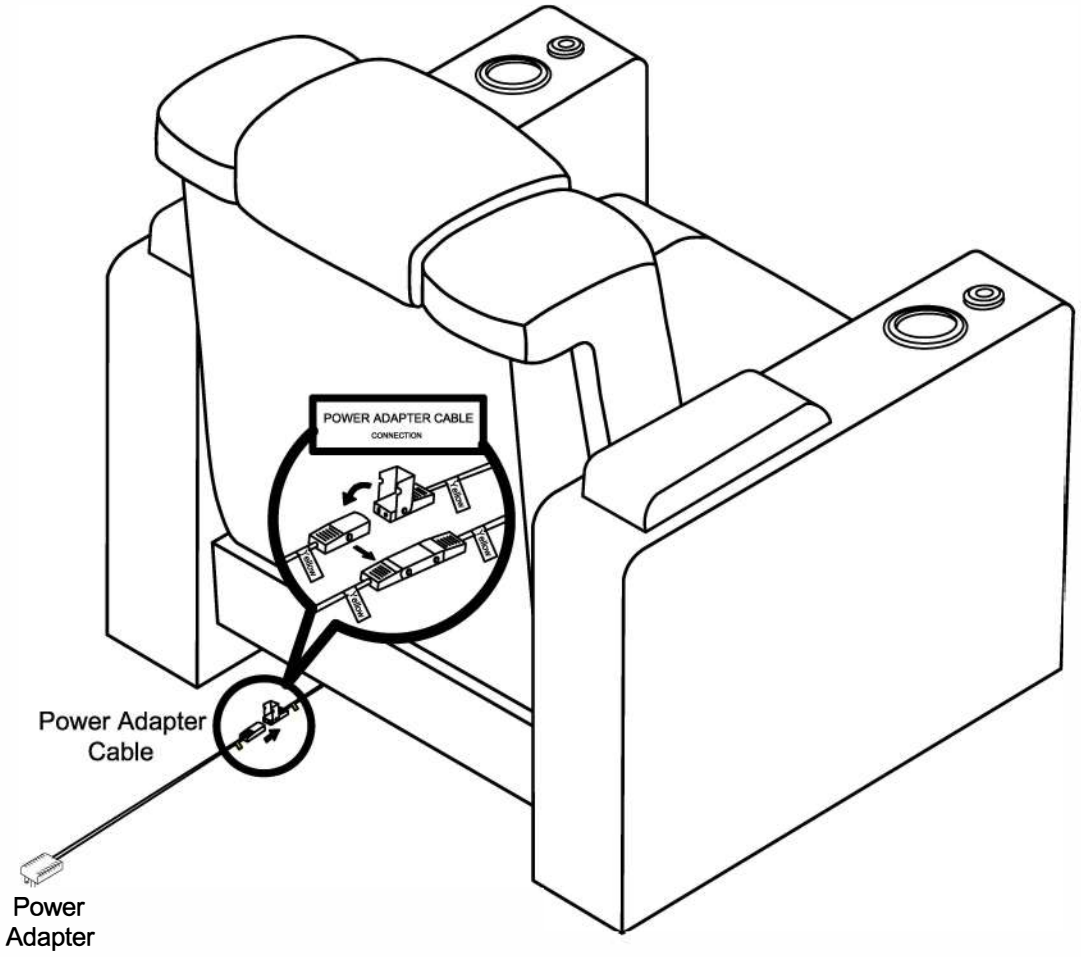

Connect the Power Cables

End Seats: Plug in the Power Adapter Cable to the Power Adapter. Connect the Power Adapter to the seat base.
Middle Seat: Plug in the Headrest Light Power Cable to seat base.

Plug in all four cables to a power source.

STEP 4

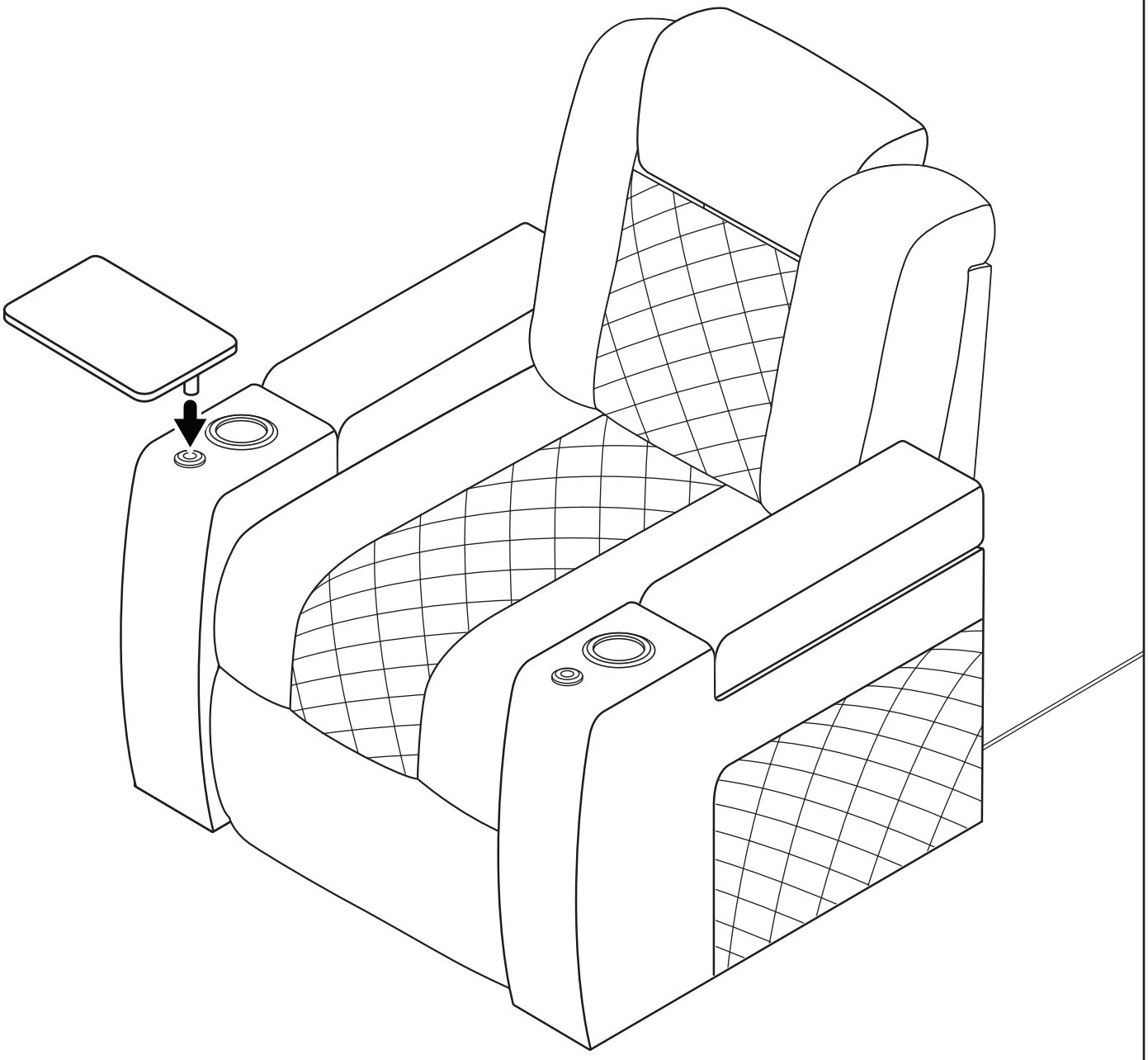

Attach the Tray Table

Open the in-arm storage to find your Tray Table. Place the Tray Table into the accessory mount.

Using thePower / Massage Remote Control

POWERED HEADREST, LUMBAR, & RECLINE

Adjust your seat to any desired pasition with the push of a button

head rest

Push this side to return headrest

Push this side to extend heatrest

recline

Push this side to return lumbar

Push this side to extend recline

lumbar

Push this side to return lumbar

Push this side to extend lumbar



DEEP HEAT RELIEF

Heat On/Off button, This provides deep relief to your back while this feature is active

3 MASSAGE MODES

Choose your desired massage mode by pushing this button

PULSE **WAVE** **ALTERNATING ZONES**

HOME BUTTON

push this button to retun seat to default position

POWER BUTTON

PWT

Turns all massage zones on/off when pressed

4 MASSAGE ZONES

Customize your massage experiance by contolling which zones are active. LED's will signify which zones are currently on if no zones are selected, then the massage will turn off

Troubleshooting Guide

Q. Why doesn't my chair have power?

A. The Power Adapter has become loose or disconnected.

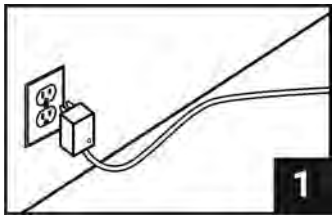

Unplug and re-plug in the Power Adapter to a wall outlet.

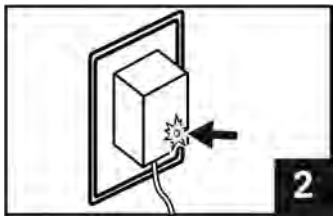

The green light on the Power Adapter should be illuminated.

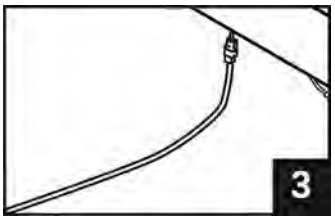

Unplug and re-plug in the Power Adapter Cable into the Seat Base Power Cable.

Q. Why arn't my chair's power features functioning?

A. The Power Cable Connection has become loose or disconnected.

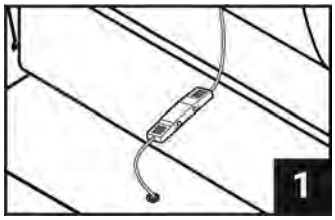

Unplug and re-plug the Power Cable Connection to each other.

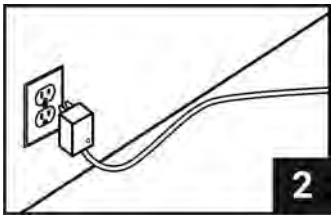

Unplug and re-plug in the Power Adapter to a wall outlet.

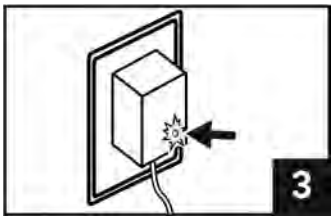

The green light on the Power Adapter should be illuminated.

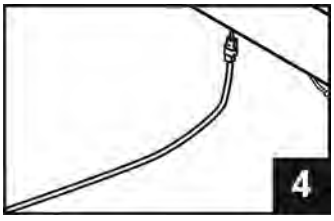

Unplug and re-plug in the Power Adapter Cable into the Seat Base Power Cable.

Troubleshooting Guide

Q. Why aren't my chair's Massage Features functioning?

A. The Massage Cable Connection has become loose or disconnected.

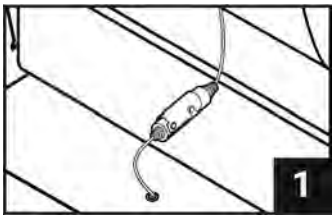

Unplug and re-plug the Massage Cable Connection to each other.

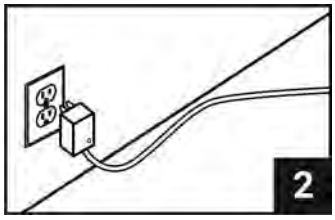

Unplug and re-plug in the Power Adapter to a wall outlet.

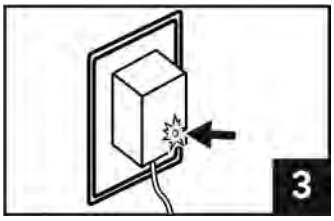

The green light on the Power Adapter should be illuminated.

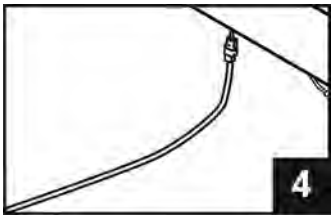

Unplug and re-plug in the Power Adapter Cable into the Seat Base Power Cable.

Q. Why arn't my chair's Massage Remote functioning?

A. The Massage Remote Cable Connection has become loose or disconnected.

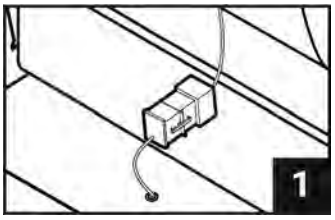

Unplug and re-plug the Remote Cable Connection to each other.

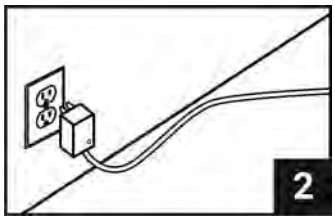

Unplug and re-plug in the Power Adapter to a wall outlet.

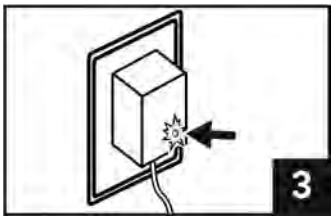

The green light on the Power Adapter should be illuminated.

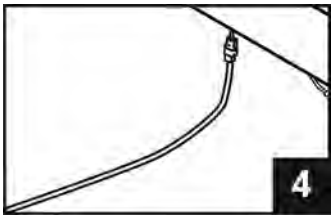

Unplug and re-plug in the Power Adapter Cable into the Seat Base Power Cable.

Troubleshooting Guide

Q. How do I remove the backrest from the seat base?

A. The Backrest Female Bracket has a locking tab.

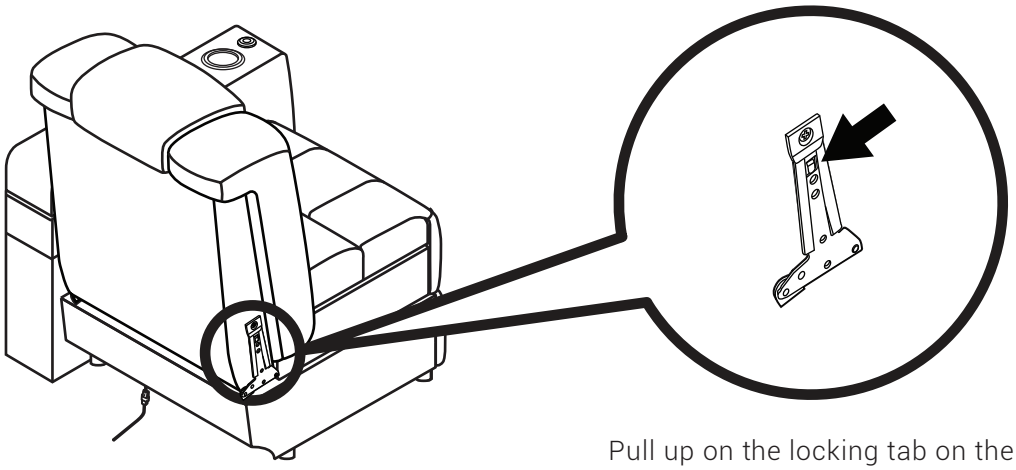

Pull up on the locking tab on the Backrest Female Bracket and firmly pull the backrest upward.

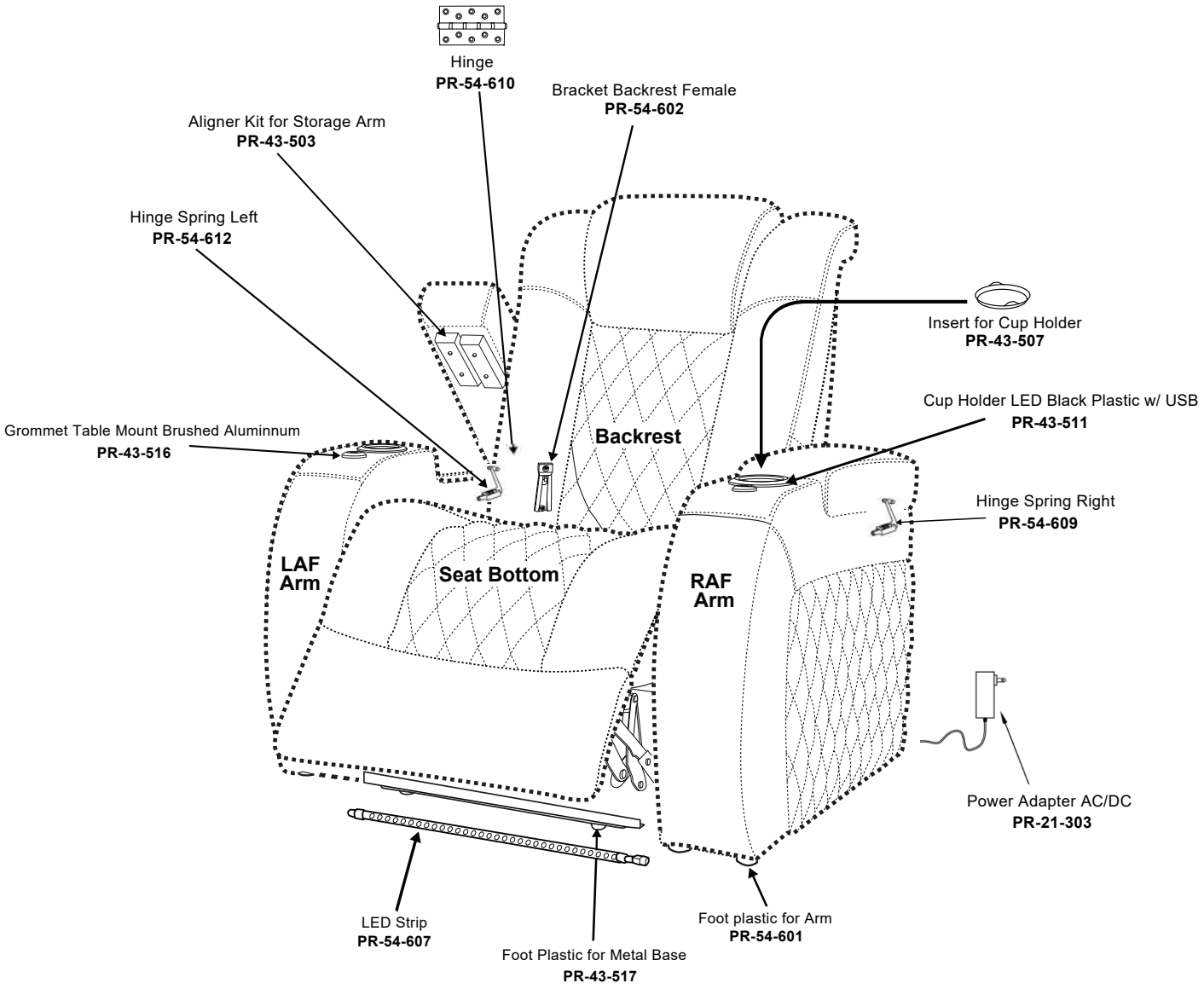



Controller for Heat/Massage
PR-32-401

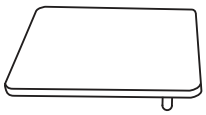

Tray Table
PT-STT-1

Mechanism for Recline	PR-65-715
Motor Recliner	PR-65-706

Proposition 65 Information

Q. **What is Proposition 65?**

A. You might have seen Proposition 65 warning labels at hotels, banks, restaurants, and even at theme parks. Proposition 65 is a California law that requires warning labels on products that may contain one of more than 800-plus chemicals or ingredients that the California Office of Environmental Health Hazard Assessment (OEHHA) has deemed to cause cancer or other reproductive toxicity. Chemicals and elements on this list include saw dust, brass, and other everyday substances, which can be found in very common household items, such as lamps, tableware, jewelry, crystal glasses, electric cords, beauty products, automobiles, and furniture.

Q. **Why did I find a Proposition 65 warning on my furniture product?**

A. This warning label is very common and can be found on almost every piece of furniture sold in the state of California. By law the state of California requires that we include a Proposition 65 warning on all of our products.

Important Safety Instructions

⚠ DANGER — **TO REDUCE THE RISK OF ELECTRIC SHOCK OR SERIOUS INJURY:**

- Disconnect the electrical plug from the wall outlet before cleaning, moving, servicing or when not in use for an extended period of time.
- Do not use this product if it is wet, in water, around water or any liquid.

⚠ WARNING — **TO REDUCE THE RISK OF BURNS, FIRE, ELECTRIC SHOCK OR SERIOUS INJURY.**

- Do not operate the unit until the back is installed and locked.
- Closely supervise children and disabled persons using this product.
- This product has many moving parts, serious injury can occur if not used properly. Keep children and pets away from the mechanism. Keep hands, fingers and body parts away from the mechanism.
- Sit down in the unit slowly. To avoid tip over, do not throw your weight against the back of the unit. Move the unit into or out of the reclining position slowly, making sure that no children or pets are in close proximity.
- Only the occupant should operate the unit. Never attempt to open the leg rest by pulling on it.
- Do not stand, sit or place extra weight on the arms, back or open leg rest.
- To safely exit the unit and prevent a tripping hazard bring the back upright and close the leg rest.
- Provide a clear path for operation of the chair, back and leg rest. Place tables and area rugs at a distance to allow the leg rest to fully extend without rubbing or interference.
- Keep hands, arms and body parts away from the open area between a reclined back and an upright back on a motion sofa. This area must remain clear at all times to provide unobstructed movement and prevent injury that could occur when a reclined back is returning toward the upright position.
- Use care when moving the product. Before lifting the product, secure the mechanism to prevent unexpected opening or movement. Never move the product by the mechanism, leg rest, handle, reclining back or swivel base. Disconnect modular units. Securely grip non-moving parts only.
- Do not use this product if it is damaged. Do not use attachments or substitute parts.
- Check the condition of the power transformer, electrical cord, plug, and connectors regularly. Keep the power transformer and electrical cords away from heat sources. Never operate the unit with a damaged power transformer, electrical cord, plug or connector.
- Do not use unit if power control is damaged or wet. Do not use unit if the hand wand has been dropped in water or any liquid.
- This product is not intended for use as a healthcare device.
- Users of medical devices should contact their healthcare provider before using this product. Do not use this product if you have poor circulation, are immobile or cannot sense heat, except as directed by your healthcare provider.
- This product is intended for indoor residential use only.
- Always keep open flame and lit cigarettes away from upholstered furniture. Upholstered furniture may burn rapidly with toxic gas and thick smoke.

Warranty Information

Seatcraft is proud of its high standards of quality and workmanship that go into our products. The customer is protected by the following Limited Warranty, which applies to seats under normal indoor residential use. This warranty does not apply to seats used for commercial, institutional, or other non-residential uses.

ONE YEAR LIMITED WARRANTY: Seatcraft provides (1) one year comprehensive coverage for all components such as materials, foam and frame parts, and mechanisms including motorized parts from defective materials or workmanship.

MATERIAL: Normal fabric fading, shrinking, or stretching is not covered by this warranty. Similarly, the natural markings, stretching, and shrinking of leather is a proud mark of authenticity and therefore not covered by this warranty. Evidence of improper cleaning, abuse, or abnormal use of the materials will void this warranty.

FOAM AND FRAME PARTS: Seatcraft warrants these components for (1) one year from the time of delivery, against manufacturing defects. Foam compression is natural, and therefore not covered by this warranty.

MECHANISMS: Seatcraft warrants these components for (1) one year from the time of delivery, against manufacturing defects. After the warranty period, the customer is responsible for inspection, labor and transportation costs.

No warranties, express or implied, apply after the expiration of this Limited Warranty. The warranty period covers repair, substitution, and replacement. No returns or refunds are covered. A proof of purchase is required to service a claim; simply present the bill of sale to the dealer from whom the item was purchased, to request warranty service. Seatcraft is not liable for incidental or consequential damages occurring outside the terms of this warranty, even if advance knowledge of such damages was possible.

Contact Information

We're here to help. For any missing or damaged parts or installation assistance please call us at 1-855-244-0170.

HOURS

Mon-Fri	6AM - 7PM PST
Sat	9AM - 5PM PST
Sun	10AM - 5PM PST