SOUNDRIGHT
DIMENSION SHEET

Galleon Audio Stage

8', 9', & 10' Heights are available.

All measurements are universal and do not vary based on height.
Custom sizes are available.

8' Galleon Audio Stage

Front View

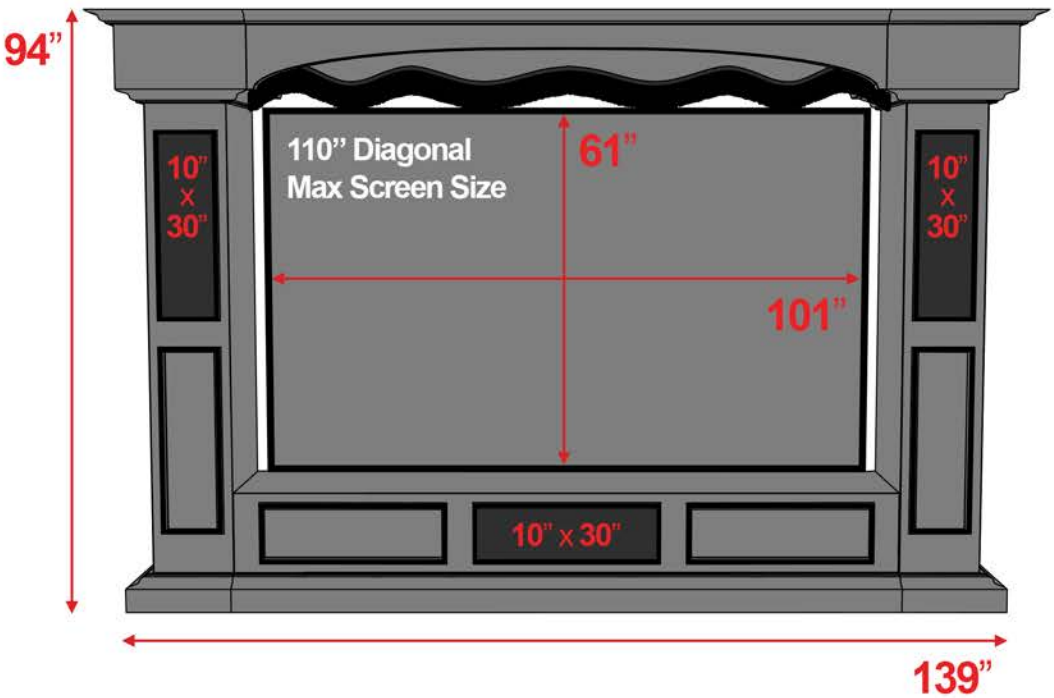

Angle View

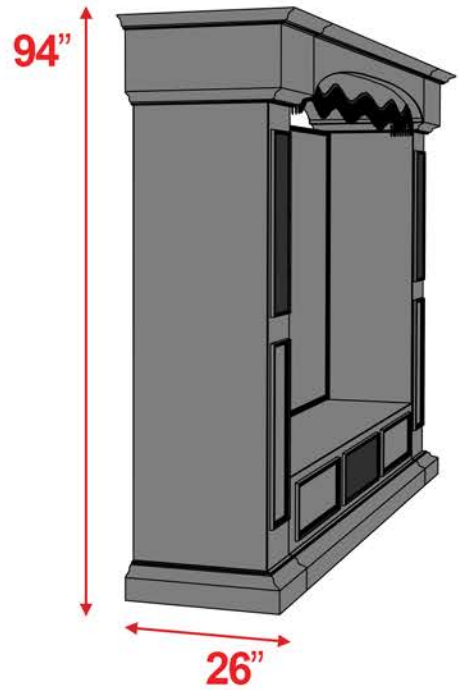

9' Galleon Audio Stage

Front View

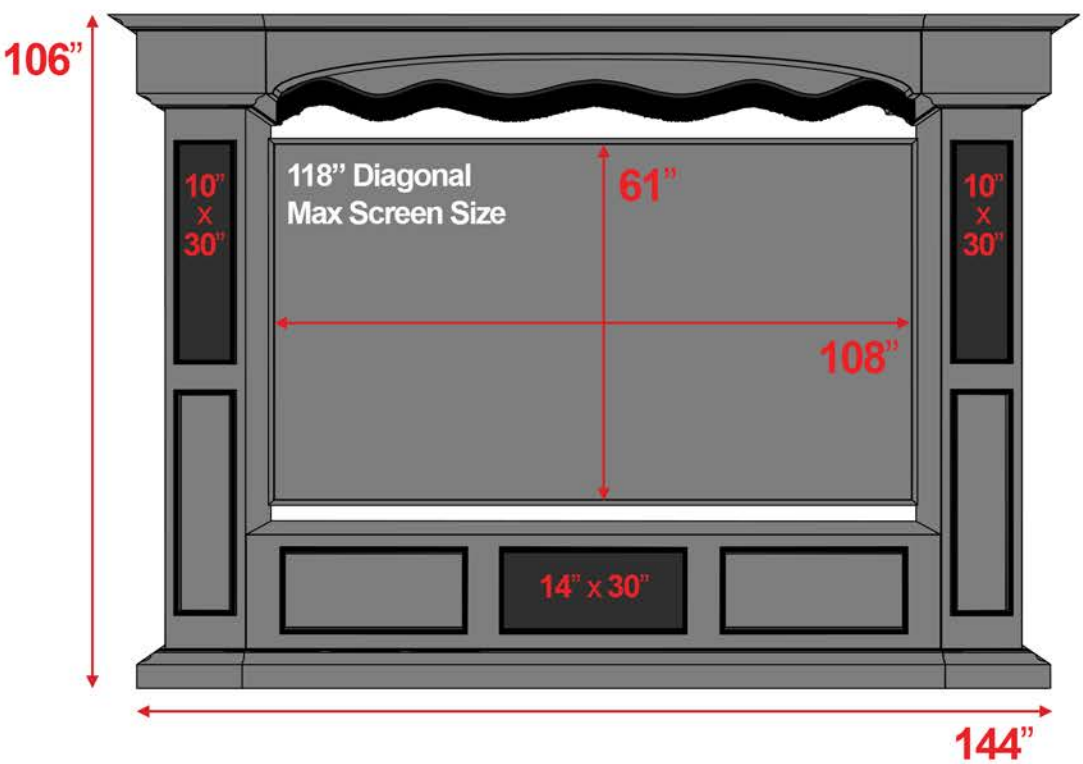

Angle View

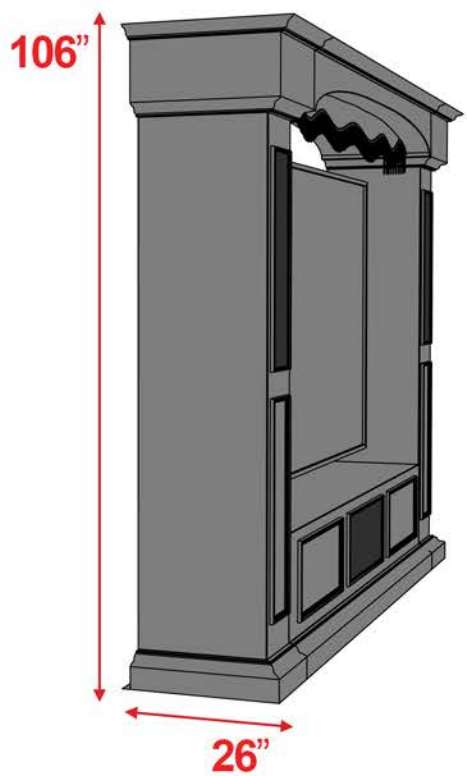

10' Galleon Audio Stage

Front View

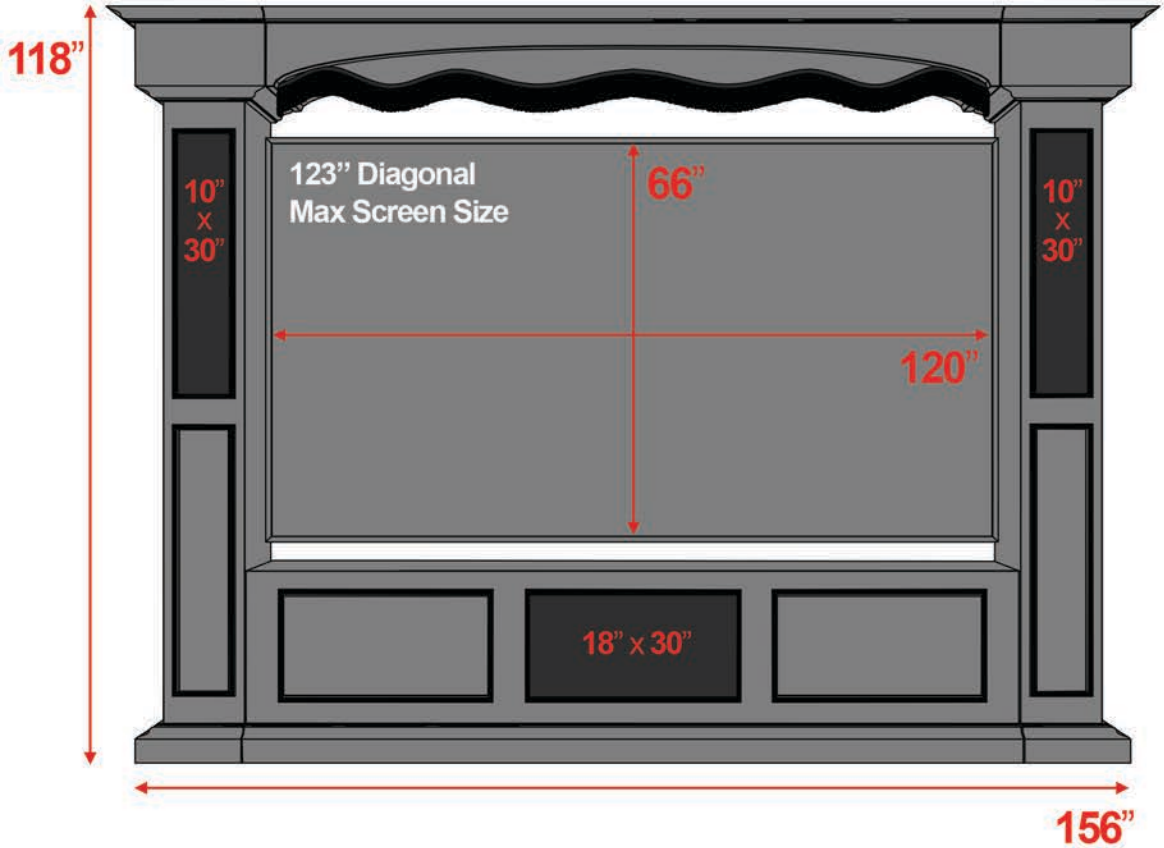

Angle View

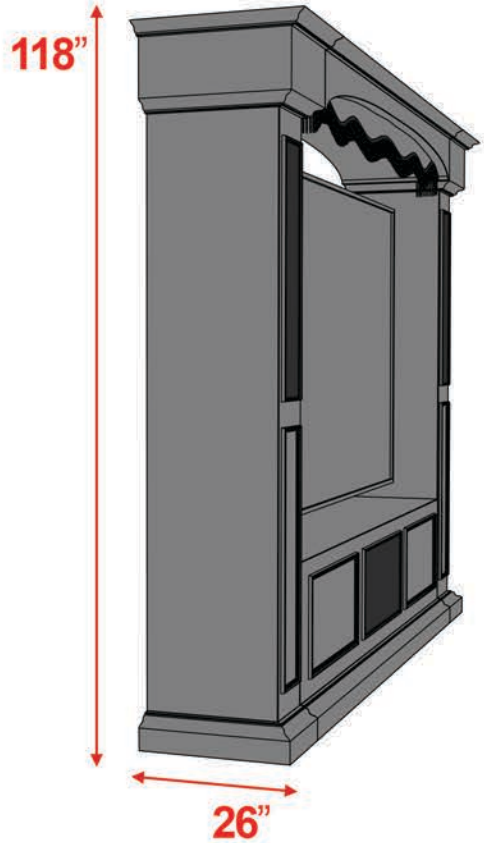

Maximize Your Screen Size!

Make sure the rows behind the front row have Line of Sight to the bottom of the screen.

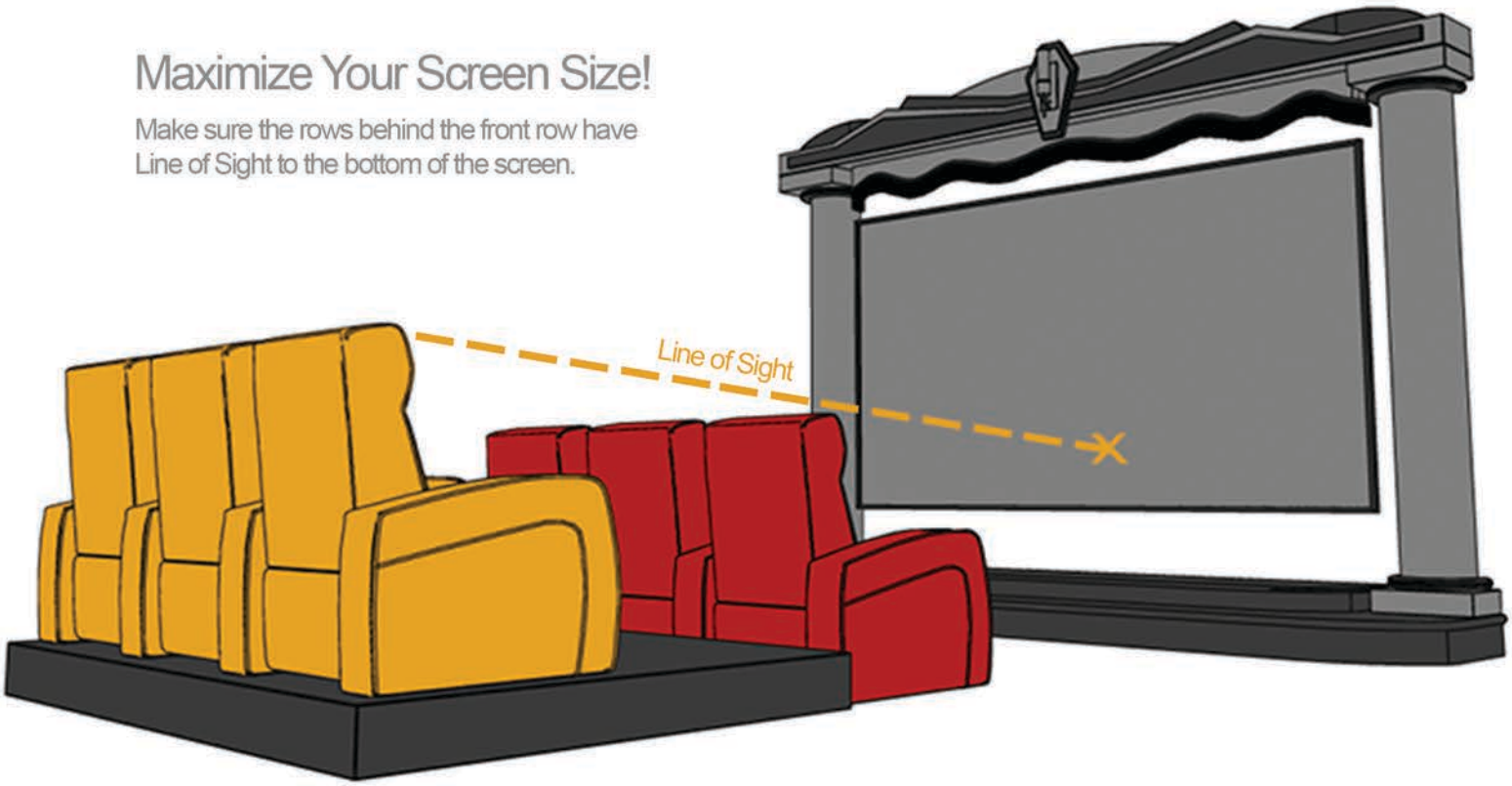

SoundRight ©2015

Product information subject to change at any time | Revision Date 6/2/2015